Dimension Drawing - Buck-Boost DC/DC converter	
ORI303025000	25A Buck-Boost DC/DC converter

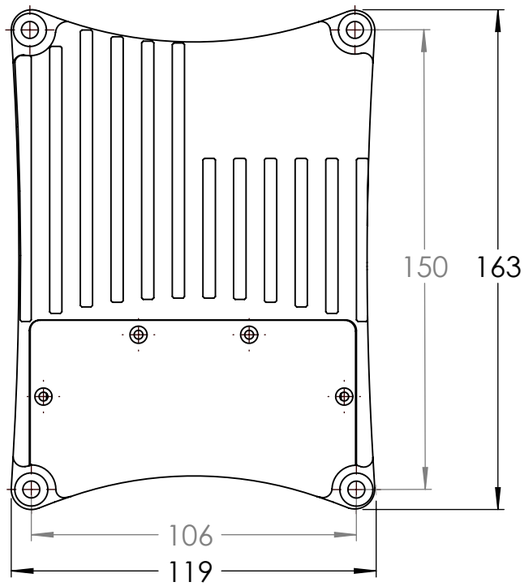

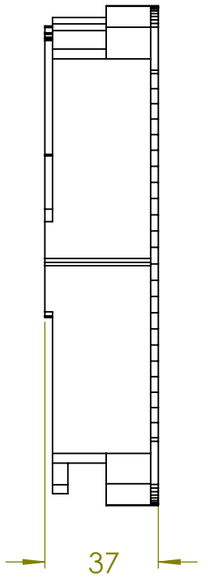

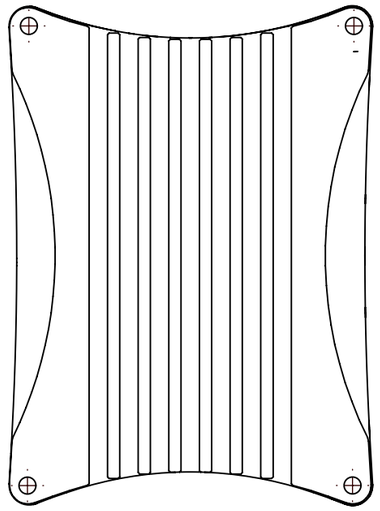

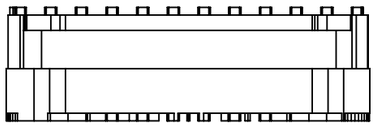

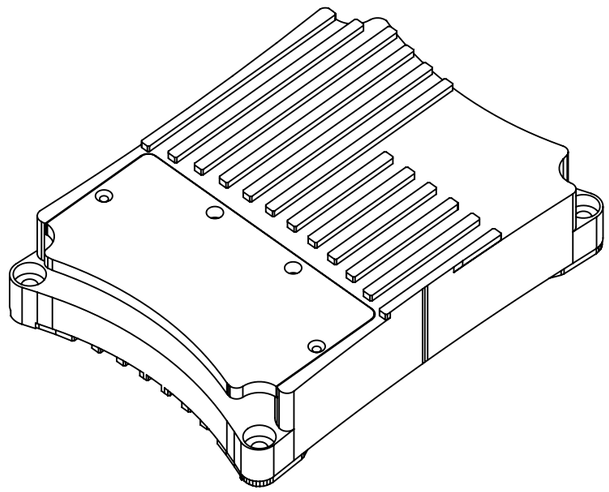

Dimensions in mm

victron energy
BLUE POWER

Rev00