Dimension Drawing - Fuse holder	
CIP000050001	Fuse holder for MIDI-fuse

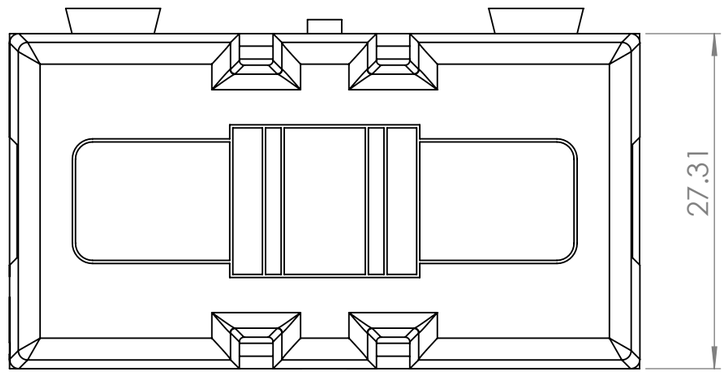

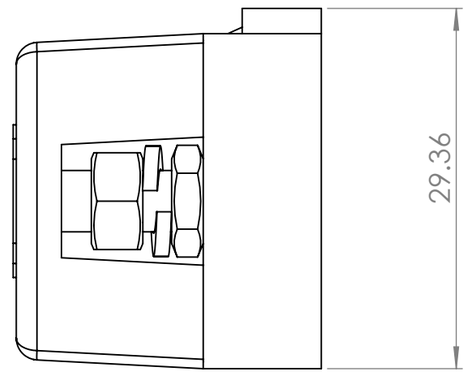

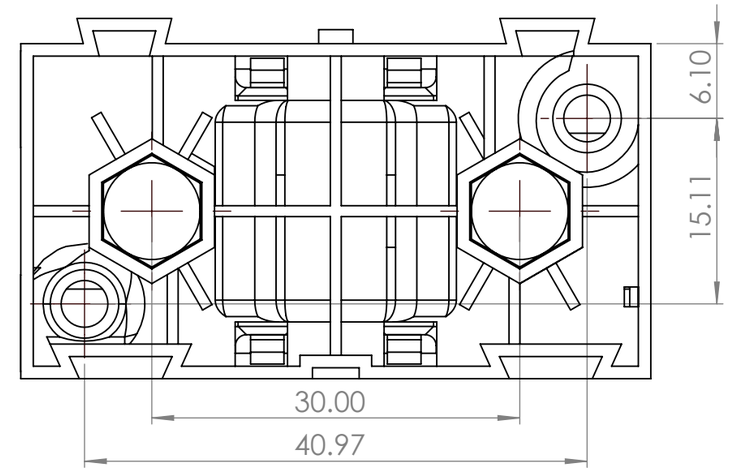

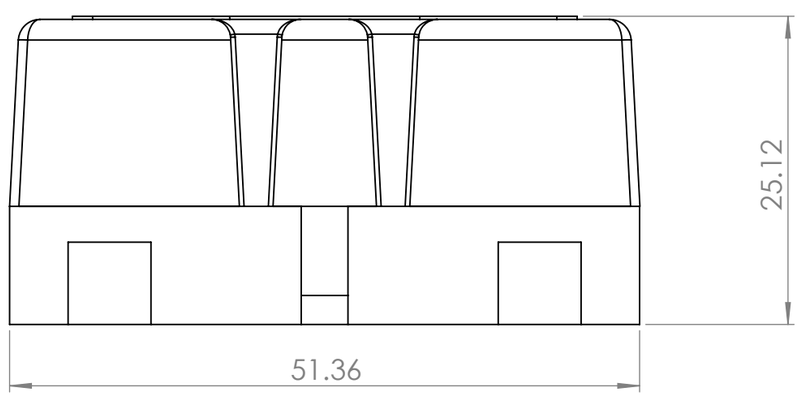

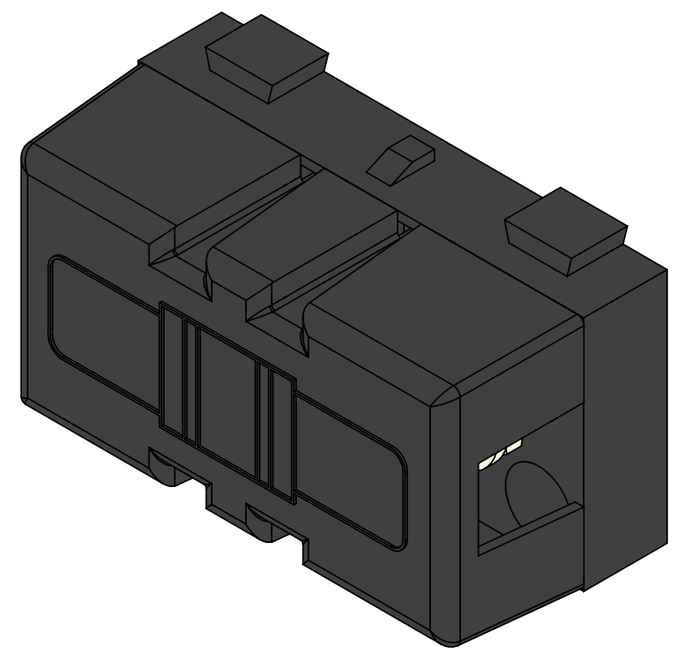

Dimensions in mm

victron energy
BLUE POWER

Rev00