Dimension Drawing - GX Touch 70 Wall Mount	
BPP900465070	GX Touch 70 Wall Mount

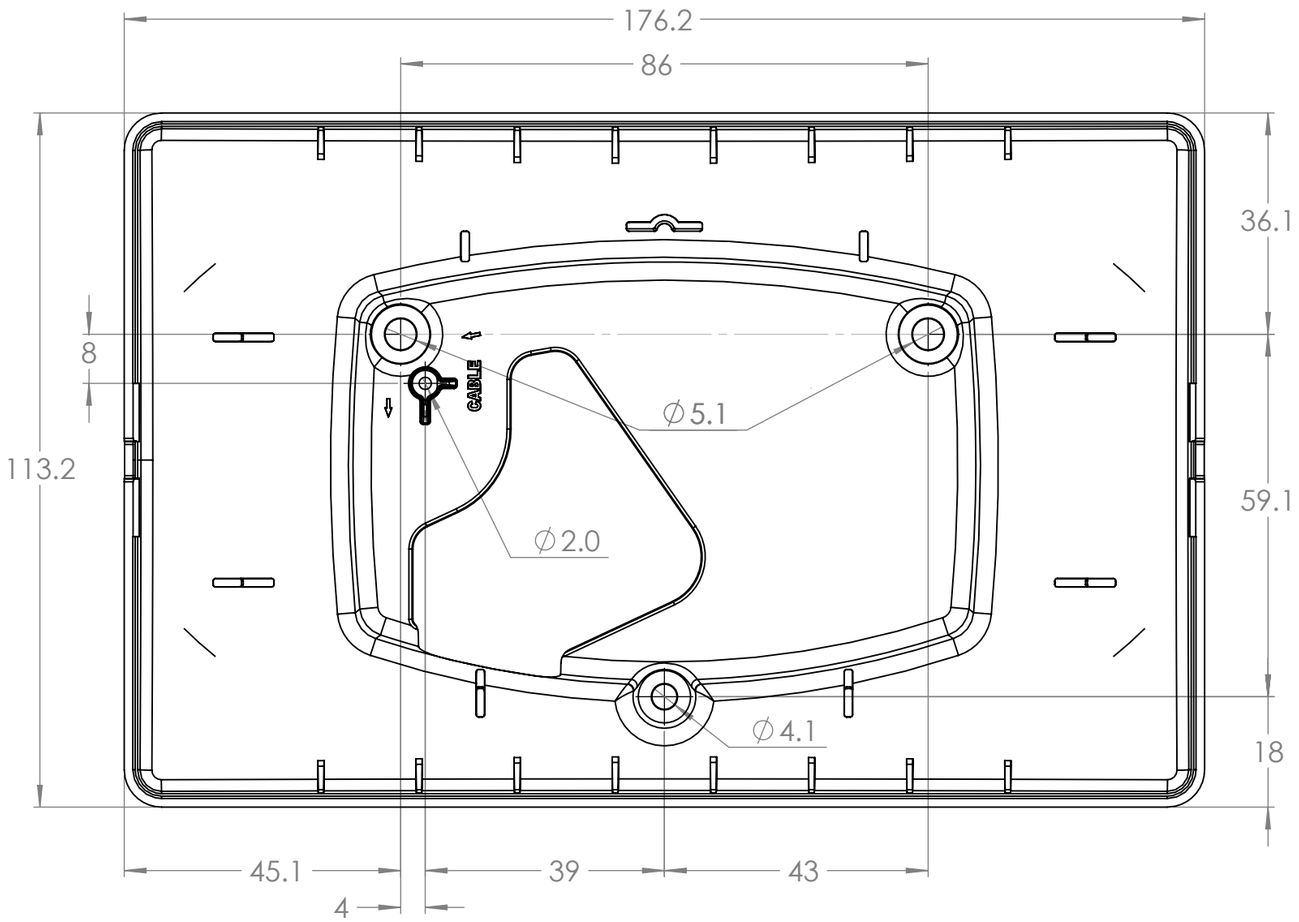

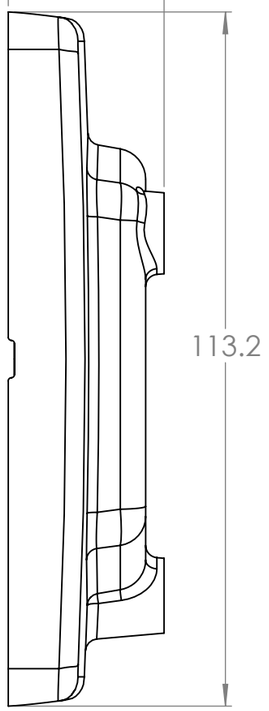

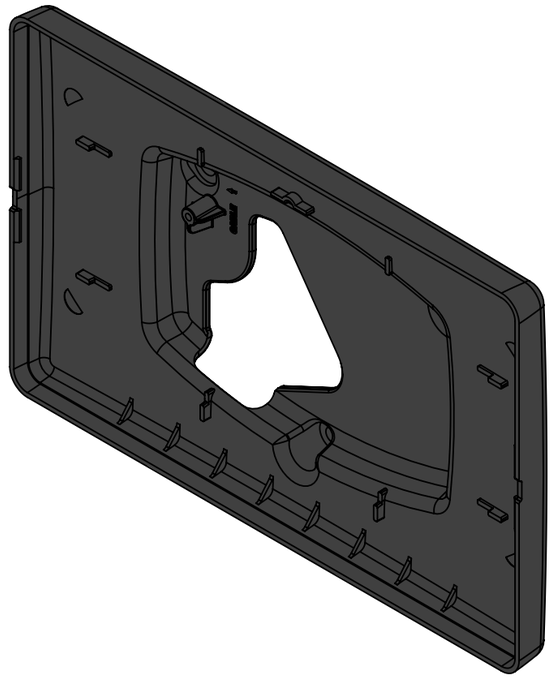

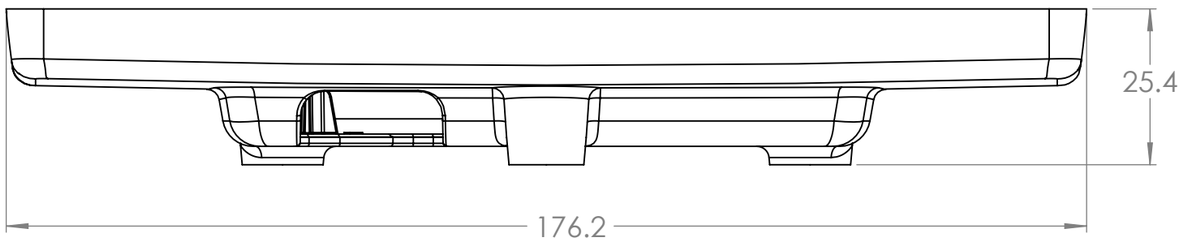

Dimensions in mm

victron energy
BLUE POWER

Rev00