Dimension Drawing - MultiPlus-II	
PMP242505010	MultiPlus-II 24/5000/120-50 230V

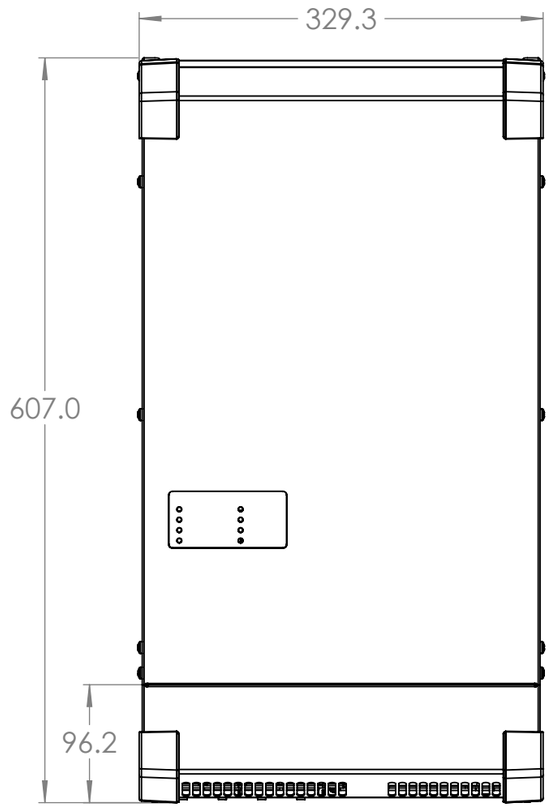

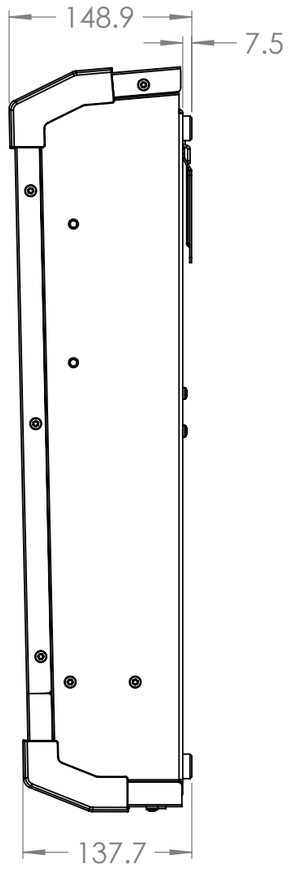

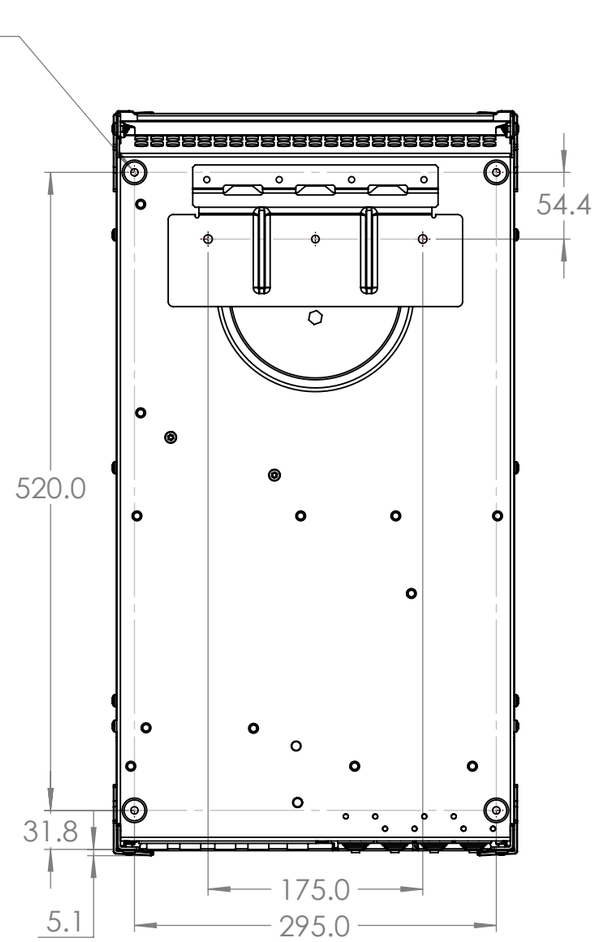

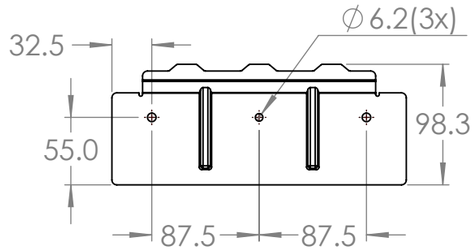

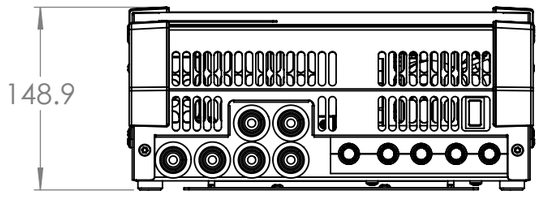

Dimensions in mm

victron energy
BLUE POWER

Rev00