Dimension Drawing - Smart BatterySense	
SBS050150200	Smart BatterySense

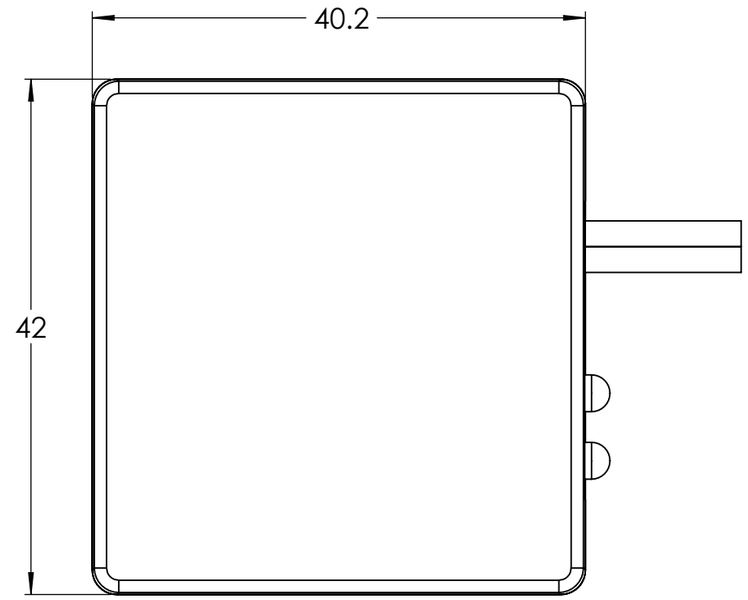

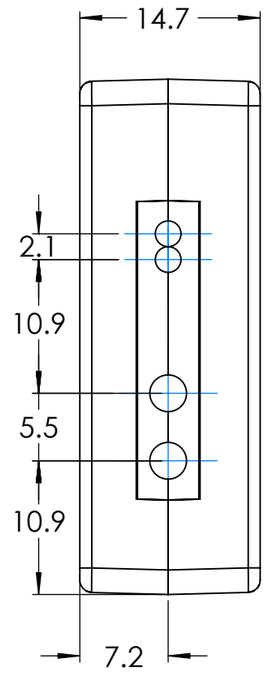

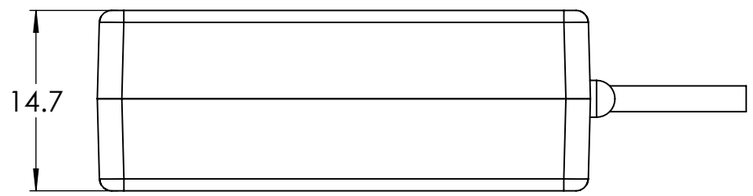

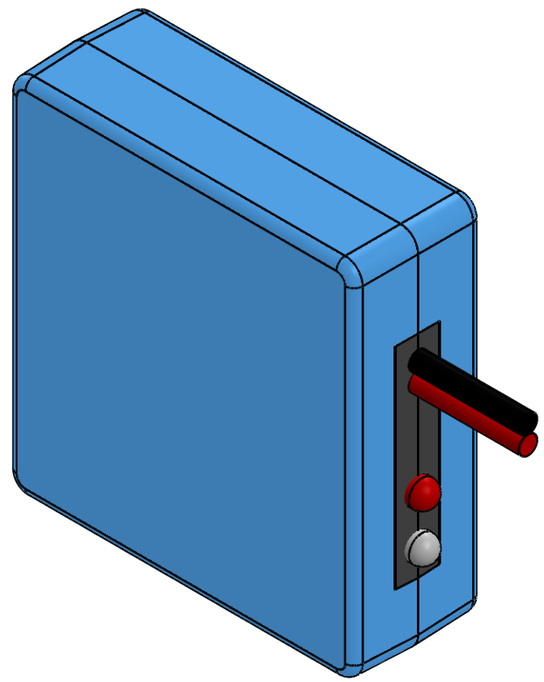

Dimensions in mm

victron energy
BLUE POWER