| Dimension Drawing - Smart Shunt 1000A | |
|---|---|
| SHU050210050 | SmartShunt 1000A/50mV |

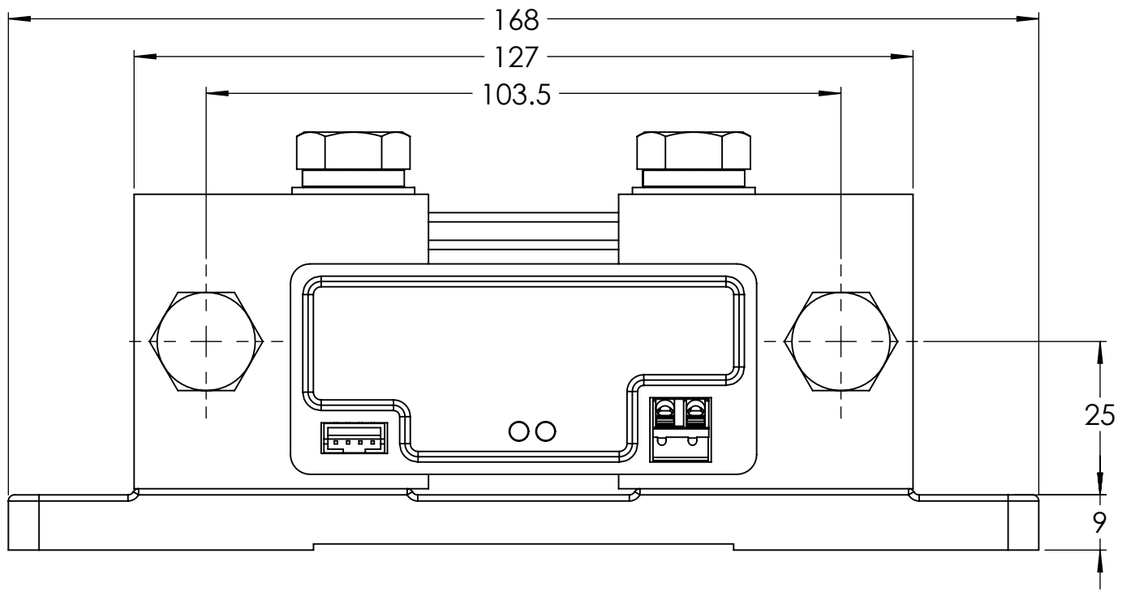


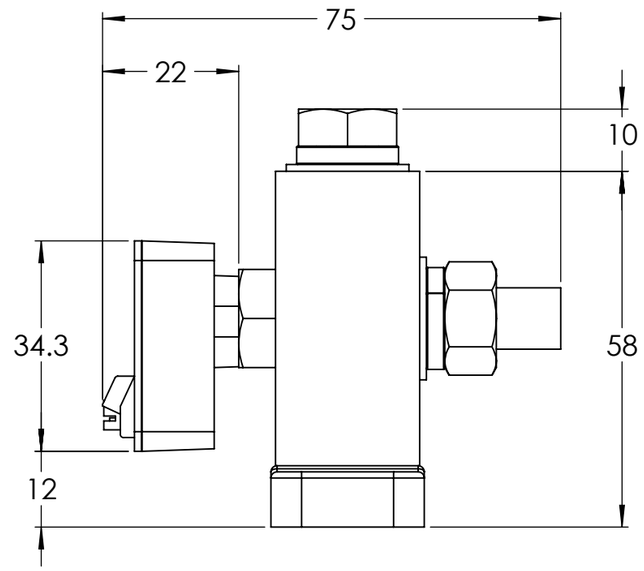


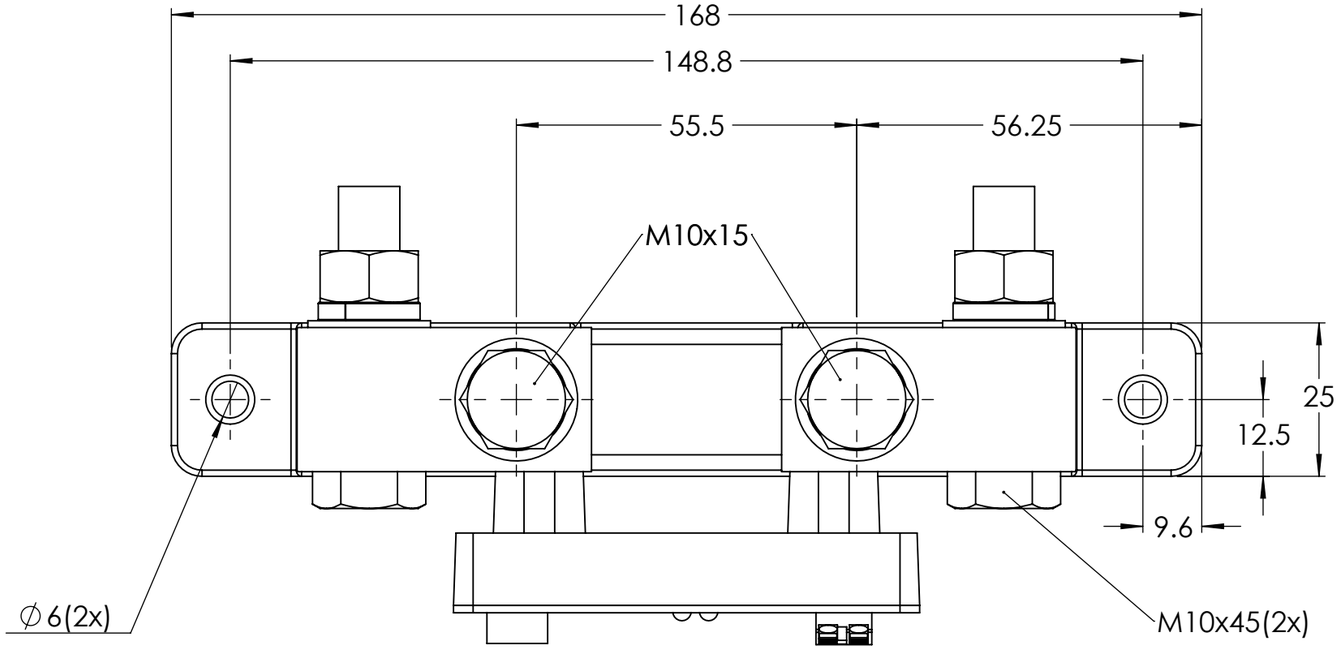


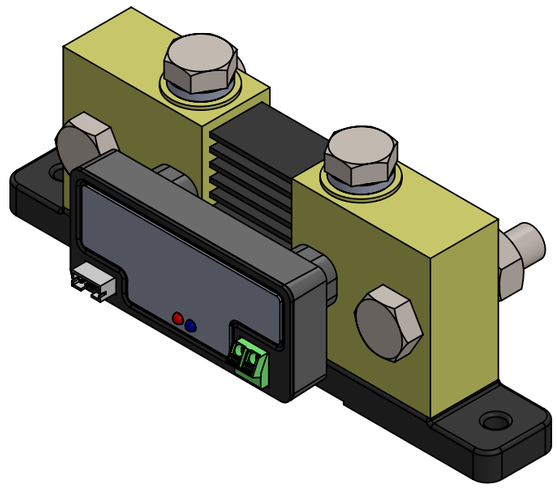

Dimensions in mm

victron energy
BLUE POWER

Rev01